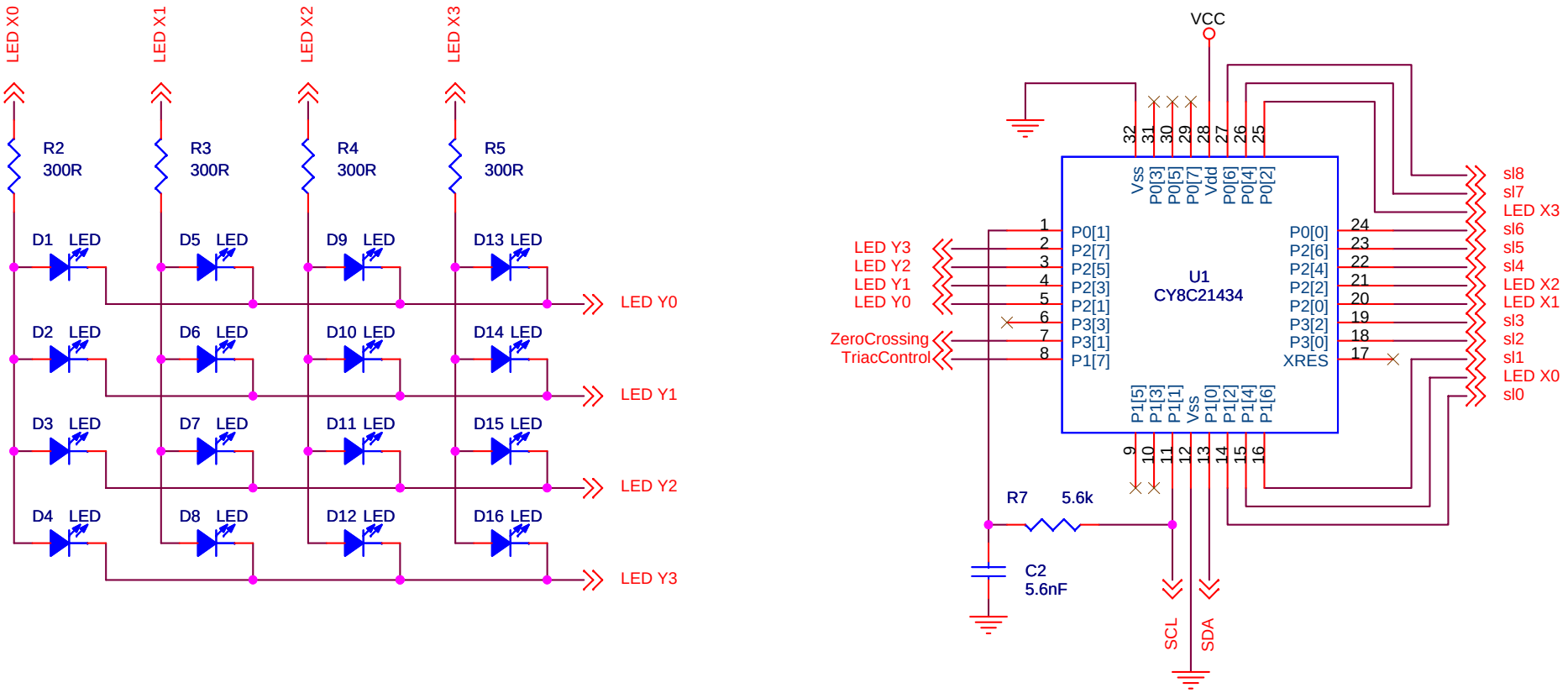

Title	Capsense board	
Size A	Document Number <Doc>	Rev 3.0
Date: Tuesday, March 06, 2007	Sheet 1 of 1	